Universal Temperature Converter

KFD2-UT2-2-1

- 2-channel signal conditioner
- 24 V DC supply (Power Rail)
- Thermocouple, RTD, potentiometer or voltage input
- Usable as signal splitter (1 input and 2 outputs)
- Voltage output 0/1 V ... 5 V
- Configurable by PACTware
- Line fault (LFD) and sensor burnout detection
- Up to SIL 2 acc. to IEC/EN 61508 / IEC/EN 61511

CE SIL 2

Function

This signal conditioner provides the galvanic isolation between field circuits and control circuits.
The device converts the signal of a resistance thermometer, thermocouple, or potentiometer to a proportional output voltage.
The device can also be configured as a signal splitter.
The removable terminal block K-CJC-** is available as an accessory for internal cold junction compensation of thermocouples.
A fault is signalized by LEDs acc. to NAMUR NE44 and a separate collective error message output.
The device is easily configured by the use of the PACTware configuration software.
For additional information, refer to the manual and www.pepperl-fuchs.com.

Connection

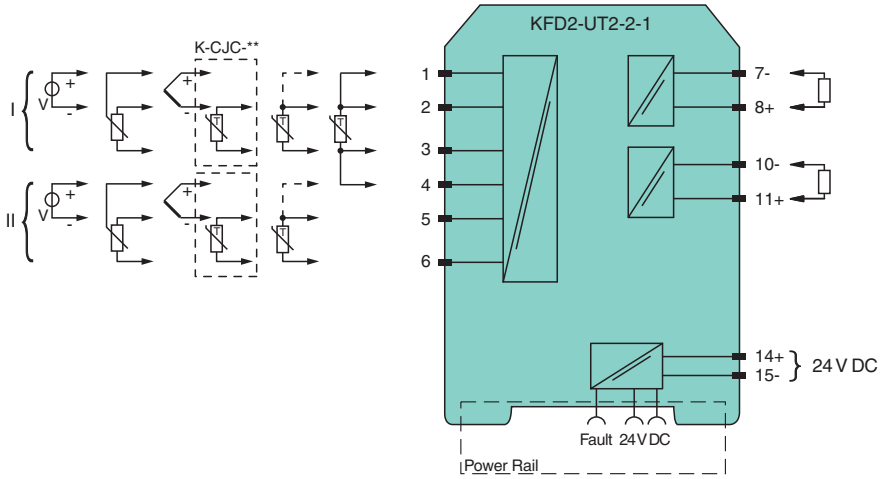

Technical Data

General specifications		
Signal type		Analog input
Functional safety related parameters		
Safety Integrity Level (SIL)		SIL 2
Supply		
Connection		terminals 14+, 15- or power feed module/Power Rail
Rated voltage	U_r	20 ... 30 V DC
Ripple		within the supply tolerance
Power dissipation		≤ 0.8 W
Power consumption		max. 0.8 W

Release date: 2023-01-03 Date of issue: 2023-01-03 Filename: 248763_eng.pdf

Technical Data

Interface	
Programming interface	programming socket
Input	
Connection side	field side
Connection	terminals 1, 2, 3; 4, 5, 6
RTD	type Pt10, Pt50, Pt100, Pt500, Pt1000 (EN 60751: 1995) type Pt10GOST, Pt50GOST, Pt100GOST, Pt500GOST, Pt1000GOST (6651-94) type Cu10, Cu50, Cu100 (P50353-92) type Ni100 (DIN 43760)
Measuring current	approx. 200 µA with RTD
Types of measuring	2-, 3-wire connection
Lead resistance	max. 50 Ω per line
Measurement loop monitoring	sensor breakage, sensor short-circuit
Thermocouples	type B, E, J, K, N, R, S, T (IEC 584-1: 1995) type L (DIN 43710: 1985) type TXK, TXKH, TXA (P8.585-2001)
Cold junction compensation	external and internal
Measurement loop monitoring	sensor breakage
Potentiometer	0 ... 20 kΩ (2-wire connection), 0.8 ... 20 kΩ (3-wire connection)
Voltage	selectable within the range -100 ... 100 mV
Input resistance	≥ 1 MΩ (-100 ... 100 mV)
Output	
Connection side	control side
Voltage output	0 ... 5 V or 1 ... 5 V ; output resistance: ≤ 5 Ω ; load: ≥ 10 kΩ
Connection	output I: terminals 7-, 8+ output II: terminals 10-, 11+
Fault signal	downscale 0 V or 0.5 V, upscale 5.375 V
Transfer characteristics	
Deviation	
After calibration	Pt100: ± (0.06 % of measurement value in K + 0.1 K (4-wire connection)) thermocouple: ± (0.05 % of measurement value in °C + 1 K (1.2 K for types R and S)) , includes ± 0.8 K fault of the cold junction compensation (CJC) mV: ± 50 µV potentiometer: ± 0.05 % of full scale, (excludes faults due to lead resistance) output: 1 to 5 V output: ± 4 mV from 0 to 103.1 % of span; 0 to 5 V output: ± 4 mV from 0.3 to 102.5 % of span
Influence of ambient temperature	Pt100: ± (0.0015 % of measurement value in K + 0.006 % of span)/K ΔT_{amb} *) thermocouple: ± (0.02 K + 0.005 % of measurement value in °C + 0.006 % of span)/K ΔT_{amb} *)), influence of cold junction compensation (CJC) included mV: ± (0.01 % of measurement value + 0.006 % of span)/K ΔT_{amb} *) potentiometer: ± 0.006 % of span/K ΔT_{amb} *) *) ΔT_{amb} = ambient temperature change referenced to 23 °C (296 K)
Influence of supply voltage	< 0.01 % of span
Reaction time	worst case value (sensor breakage and/or sensor short circuit detection enabled) mV: 1.2 s, thermocouples with CJC: 1.4 s, thermocouples with fixed ref. temp: 1.4 s, 3- or 4-wire RTD: 1.1 s, 2-wire RTD: 920 ms, Potentiometer: 3-wire connection 2.8 s, 2-wire connection 2.25 s
Galvanic isolation	
Input/Other circuits	basic insulation according to IEC 61010-1, rated insulation voltage 300 V_{eff}
Output/supply, programming input	functional insulation, rated insulation voltage 50 V AC There is no electrical isolation between the programming input and the supply. The programming cable provides galvanic isolation so that ground loops are avoided.
Indicators/settings	
Display elements	LEDs
Configuration	via PACTware
Labeling	space for labeling at the front
Directive conformity	
Electromagnetic compatibility	
Directive 2014/30/EU	EN 61326-1:2013 (industrial locations)
Conformity	
Electromagnetic compatibility	NE 21:2006

Release date: 2023-01-03 Date of issue: 2023-01-03 Filename: 248763_eng.pdf

Technical Data

Degree of protection	IEC 60529:2001
Ambient conditions	
Ambient temperature	-20 ... 60 °C (-4 ... 140 °F)
Mechanical specifications	
Degree of protection	IP20
Connection	screw terminals
Mass	approx. 130 g
Dimensions	20 x 119 x 115 mm (0.8 x 4.7 x 4.5 inch) (W x H x D) , housing type B2
Mounting	on 35 mm DIN mounting rail acc. to EN 60715:2001
General information	
Supplementary information	Observe the certificates, declarations of conformity, instruction manuals, and manuals where applicable. For information see www.pepperl-fuchs.com.

Assembly

Front view

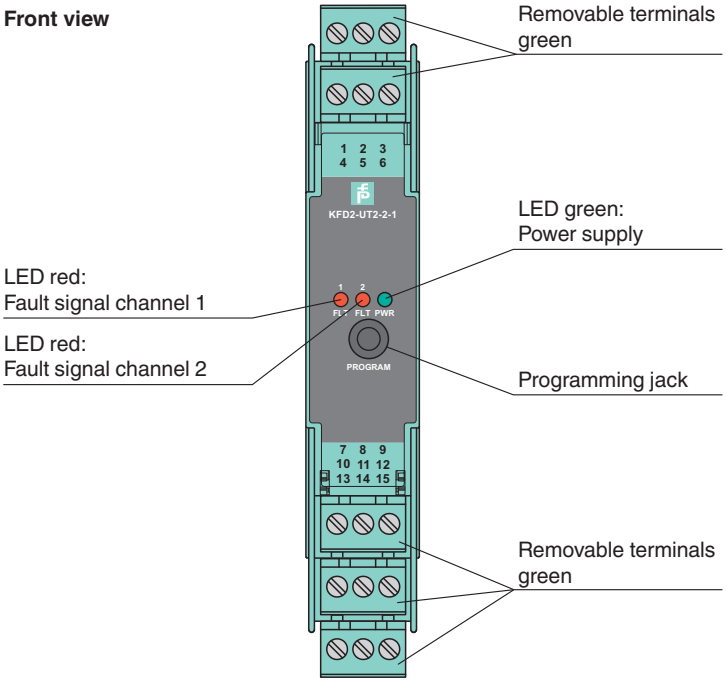

Matching System Components

	**DTM Interface Technology**	Device type manager (DTM) for interface technology
PACTware	**PACTware 5.0**	FDT Framework
	**K-ADP-USB**	Programming adapter with USB interface
	**KFD2-EB2**	Power Feed Module
	**UPR-03**	Universal Power Rail with end caps and cover, 3 conductors, length: 2 m

Release date: 2023-01-03 Date of issue: 2023-01-03 Filename: 248763_eng.pdf

Matching System Components

	**UPR-03-M**	Universal Power Rail with end caps and cover, 3 conductors, length: 1,6 m
	**UPR-03-S**	Universal Power Rail with end caps and cover, 3 conductors, length: 0.8 m
	**K-DUCT-GY**	Profile rail, wiring comb field side, gray
	**K-DUCT-GY-UPR-03**	Profile rail with UPR-03-* insert, 3 conductors, wiring comb field side, gray

Accessories

	**K-CJC-BK**	Terminal block for cold junction compensation, 3-pin screw terminal, black
	**KF-ST-5GN**	Terminal block for KF modules, 3-pin screw terminal, green
	**KF-CP**	Red coding pins, packaging unit: 20 x 6

Release date: 2023-01-03 Date of issue: 2023-01-03 Filename: 248763_eng.pdf